Spare Parts

LKB UltraPure Butterfly Valve

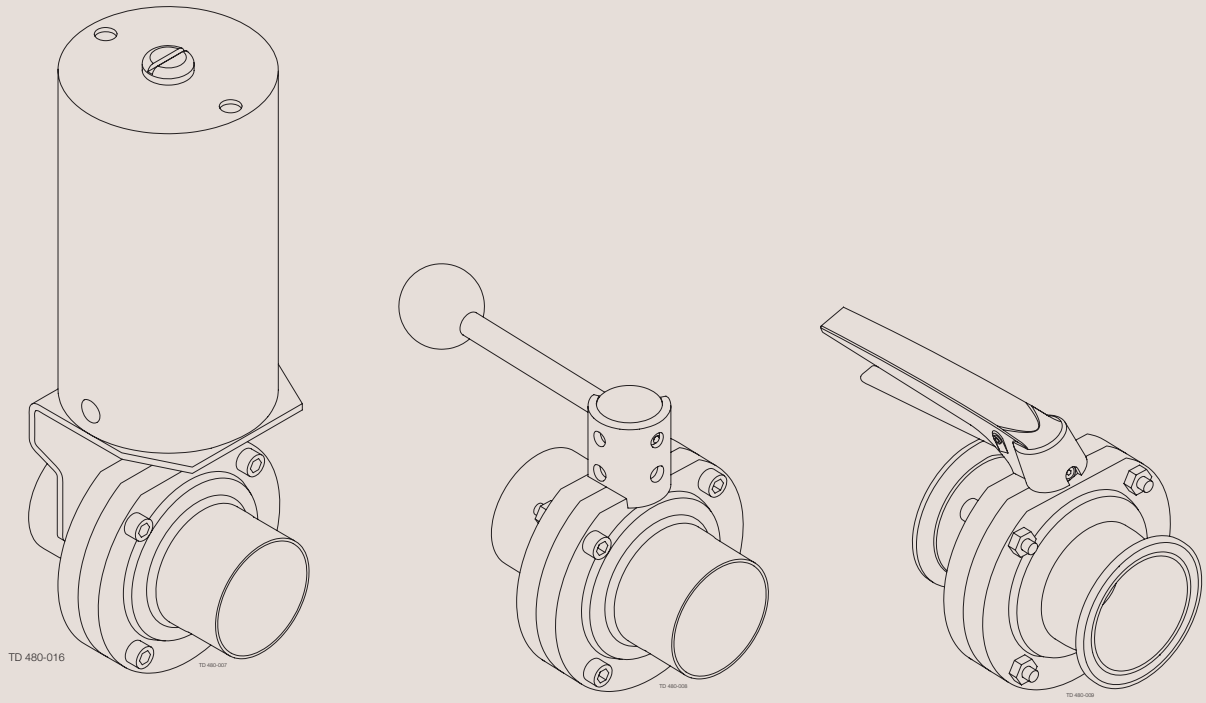

ESE01700-EN1 1106

Original manual

Table of contents

The information herein is correct at the time of issue but may be subject to change without prior notice

1. LKB UltraPure Butterfly Valve, ISO 4
2. LKB UltraPure Butterfly Valve, ASME 6
3. LKB UltraPure Butterfly Valve, DIN 8
4. LKB Lockable Multiposition Handle for Valve 10
5. LKB Handle 1.1 for Butterfly Valve 12
6. Handle 1.1 for Indication Unit 14
7. LKLA Actuator Air/Spring (NC-NO) ø85 16
8. LKLA Actuator Air/Air ø85 18
9. LKLA Actuator Air/Spring (NC-NO) ø133 20
10. LKLA Actuator Air/Air ø133 22
11. LKLA-T Actuator Air/Spring (NC-NO) ø85 24
12. LKLA-T Actuator Air/Air ø85 26
13. LKLA-T Actuator Air/Spring (NC-NO) ø133 28
14. LKLA-T Actuator Air/Air ø133 30

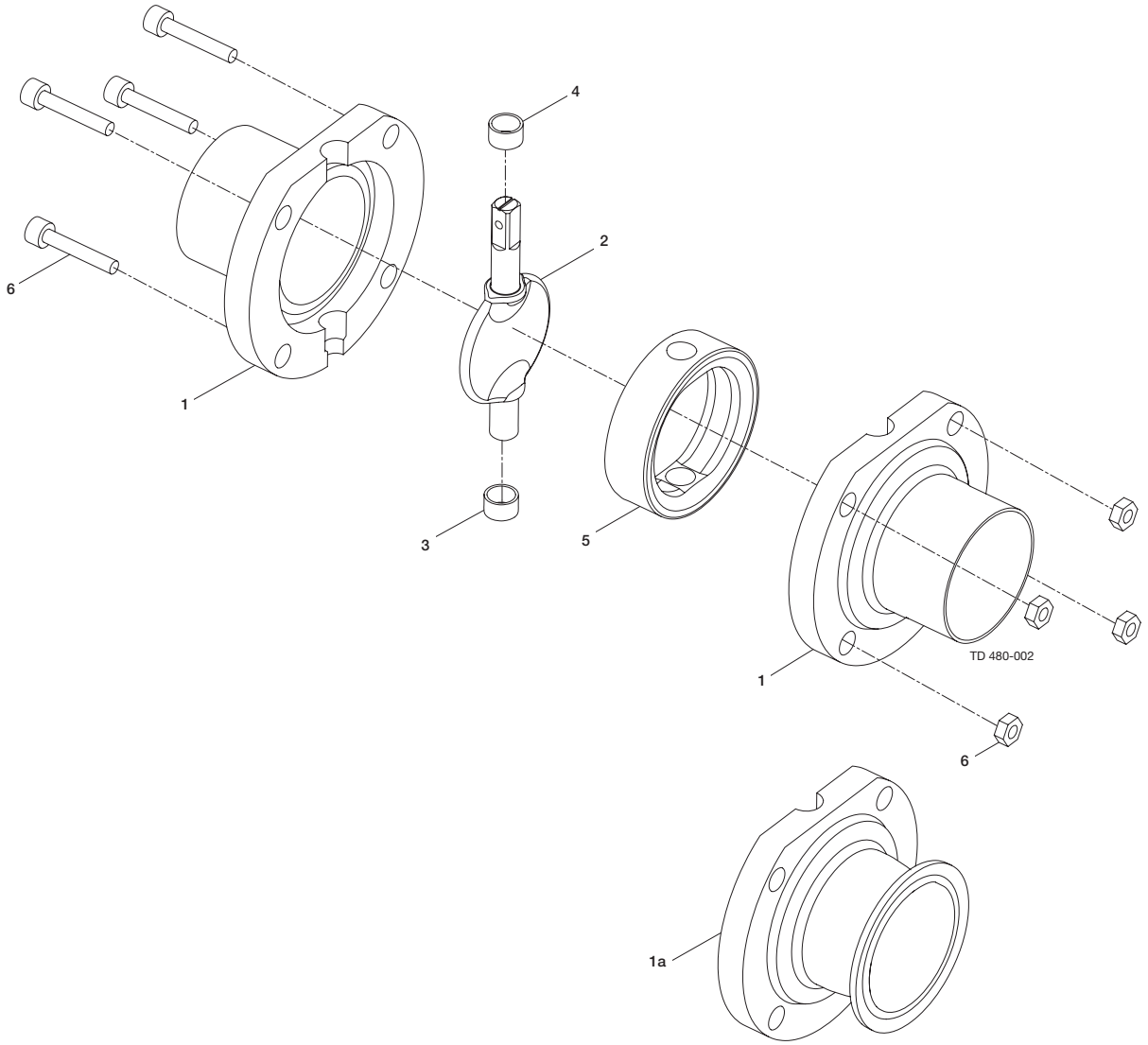
4
2
6
1
3
5
1
TD 480-002
6
1a

Pos		Qty	Denomination	25 mm Disc □ 8	38 mm Disc □ 8	51 mm Disc □ 8	63.5 mm Disc □ 8	76.1 mm Disc □ 10	101.6 mm Disc □ 12
1		2	Valve body half, welding ends						
1a		2	Valve body half, clamp ferrule						
2		1	Disc*	9614-0581-01	9614-0581-02	9614-0581-03	9614-0581-04	9614-0581-05	9614-0581-06
3	▲	1	Bush						
4	▲	1	Bush						
5	▲	1	Seal ring , EPDM						
		1	Seal ring , FPM						
6		1	Set screw, M6 + Nut M6	9611-41-734-0	9611-41-734-0				
		1	Set screw , M8 + Nut M8			9611-41-735-0	9611-41-735-0	9611-41-736-0	
		1	Set screw , M10 + Nut M10						9611-41-737-0
	▲	1	Alfa Laval Q-doc service kit						

	25 mm Disc □ 8	38 mm Disc □ 8	51 mm Disc □ 8	63.5 mm Disc □ 8	76.1 mm Disc □ 10	101.6 mm Disc □ 12
Service Kits						
▲ Service kit EPDM	9611-92-3284	9611-92-3285	9611-92-3286	9611-92-3287	9611-92-3288	9611-92-3289
▲ Service kit FPM	9611-92-3297	9611-92-3298	9611-92-3299	9611-92-3300	9611-92-3301	9611-92-3302

Parts marked with ▲ are included in the service kit.

Recommended spare parts: Service kit.

900581

* = 3.1 Certificate in accordance to EN 10204 included.

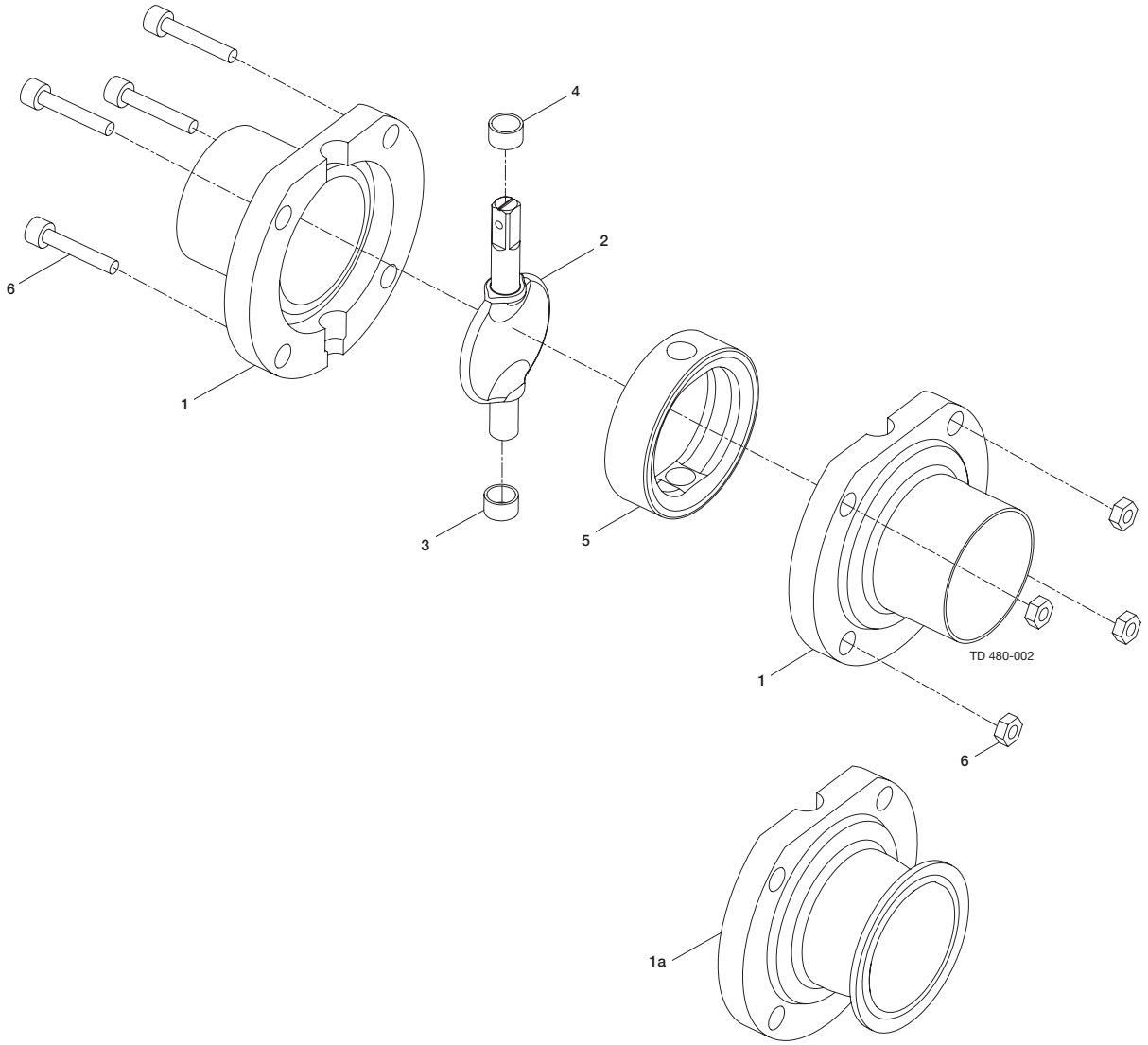
4
2
6
1
3
5
1
TD 480-002
6
1a

Pos		Qty	Denomination	25 mm Disc □ 8	38 mm Disc □ 8	51 mm Disc □ 8	63.5 mm Disc □ 8	76 mm Disc □ 10	101.6 mm Disc □ 12
RA 0.5									
1		2	Valve body half, welding ends						
1a		2	Valve body half, clamp ferrule						
2		1	Disc*	9614-0581-01	9614-0581-02	9614-0581-03	9614-0581-04	9614-0581-05	9614-0581-06
3	▲	1	Bush						
4	▲	1	Bush						
5	▲	1	Seal ring, EPDM						
6		1	Set screw , M6 + Nut M6	9611-41-734-0	9611-41-734-0				
		1	Set screw , M8 + Nut M8			9611-41-735-0	9611-41-735-0	9611-41-736-0	
		1	Set screw , M10 + Nut M10						9611-41-737-0
	▲	1	Alfa Laval Q-doc service kit						

Pos		Qty	Denomination	25 mm Disc □ 8	38 mm Disc □ 8	51 mm Disc □ 8	63.5 mm Disc □ 8	76 mm Disc □ 10	101.6 mm Disc □ 12
RA 0.38									
1		2	Valve body half, welding ends						
1a		2	Valve body half, clamp ferrule						
2		1	Disc*	9614-0581-07	9614-0581-08	9614-0581-09	9614-0581-10	9614-0581-11	9614-0581-12
3	▲	1	Bush						
4	▲	1	Bush						
5	▲	1	Seal ring , EPDM						
5		1	Seal ring , FPM						
6		1	Set screw , M6 + Nut M6	9611-41-734-0	9611-41-734-0				
		1	Set screw , M8 + Nut M8			9611-41-735-0	9611-41-735-0	9611-41-736-0	
		1	Set screw , M10 + Nut M10						9611-41-737-0
	▲	1	Alfa Laval Q-doc service kit						

		25 mm Disc □ 8	38 mm Disc □ 8	51 mm Disc □ 8	63.5 mm Disc □ 8	76 mm Disc □ 10	101.6 mm Disc □ 12
Service Kits RA 0.5							
▲	Service kit, EPDM	9611-92-3284	9611-92-3285	9611-92-3286	9611-92-3287	9611-92-3288	9611-92-3289
▲	Service kit, FPM	9611-92-3297	9611-92-3298	9611-92-3299	9611-92-3300	9611-92-3301	9611-92-3302

		25 mm Disc □ 8	38 mm Disc □ 8	51 mm Disc □ 8	63.5 mm Disc □ 8	76 mm Disc □ 10	101.6 mm Disc □ 12
Service Kits RA 0.38							
▲	Service kit, EPDM	9611-92-3284	9611-92-3285	9611-92-3286	9611-92-3287	9611-92-3288	9611-92-3289
▲	Service kit, FPM	9611-92-3297	9611-92-3298	9611-92-3299	9611-92-3300	9611-92-3301	9611-92-3302

Parts marked with ▲ are included in the service kit.

Recommended spare parts: Service kit.

900583

* = 3.1 Certificate in accordance to EN 10204 included.

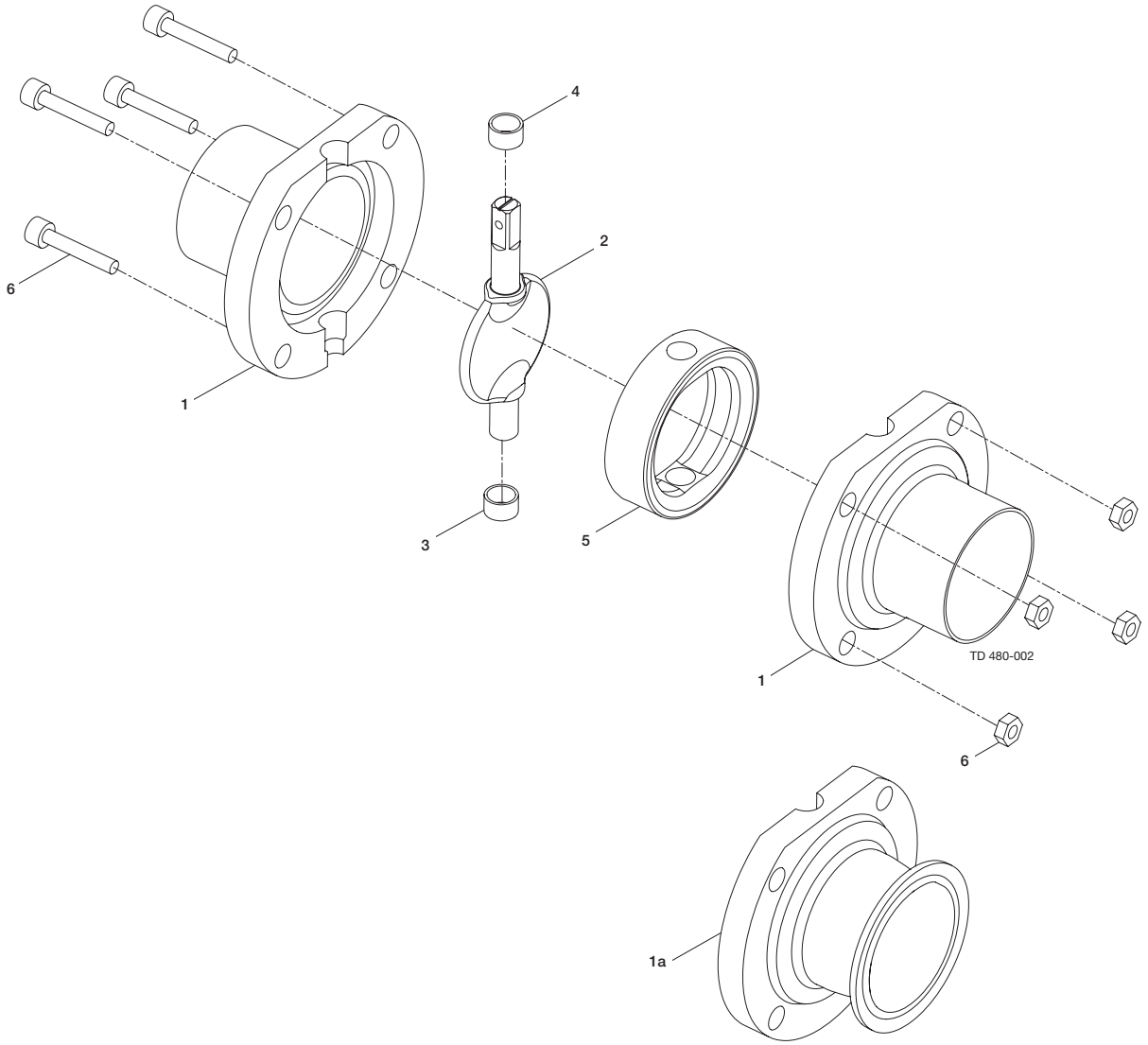
4
2
6
1
3
5
1
TD 480-002
6
1a

Pos		Qty	Denomination	DN 25 Disc □ 8	DN 32 Disc □ 8	DN 40 Disc □ 8	DN 50 Disc □ 8
1		2	Valve body half, welding ends				
1a		2	Valve body half, clamp ferrule				
2		1	Disc*	9614-0581-13	9614-0581-14	9614-0581-15	9614-0581-16
3	▲	1	Bush				
4	▲	1	Bush				
5	▲	1	Seal ring , EPDM				
5		1	Seal ring , FPM				
6		1	Set screw , M6 + Nut M6	9611-41-734-0	9611-41-734-0	9611-41-734-0	
6		1	Set screw , M8 + Nut M8				9611-41-735-0
6		1	Set screw , M10 + Nut M10				
	▲	1	Alfa Laval Q-doc service kit				

Pos		Qty	Denomination	DN 65 Disc □ 10	DN 80 Disc □ 10	DN 100 Disc □ 12
1		2	Valve body half, welding ends			
1a		2	Valve body half, clamp ferrule			
2		1	Disc*	9614-0581-17	9614-0581-18	9614-0581-19
3	▲	1	Bush			
4	▲	1	Bush			
5	▲	1	Seal ring , EPDM			
5		1	Seal ring , FPM			
6		1	Set screw , M6 + Nut M6			
6		1	Set screw , M8 + Nut M8	9611-41-736-0	9611-41-736-0	
		1	Set screw , M10 + Nut M10			9611-41-737-0
	▲	1	Alfa Laval Q-doc service kit			

		DN 25 Disc □ 8	DN 32 Disc □ 8	DN 40 Disc □ 8	DN 50 Disc □ 8
Service Kits					
▲	Service kit EPDM	9611-92-3290	9611-92-3291	9611-92-3292	9611-92-3293
▲	Service kit FPM	9611-92-3303	9611-92-3304	9611-92-3305	9611-92-3306

		DN 65 Disc □ 10	DN 80 Disc □ 10	DN 100 Disc □ 12
Service Kits				
▲	Service kit EPDM	9611-92-3294	9611-92-3295	9611-92-3296
▲	Service kit FPM	9611-92-3307	9611-92-3308	9611-92-3309

Parts marked with ▲ are included in the service kit.

Recommended spare parts: Service kit.

900582

* = 3.1 certificate in accordance to EN 10204 included.

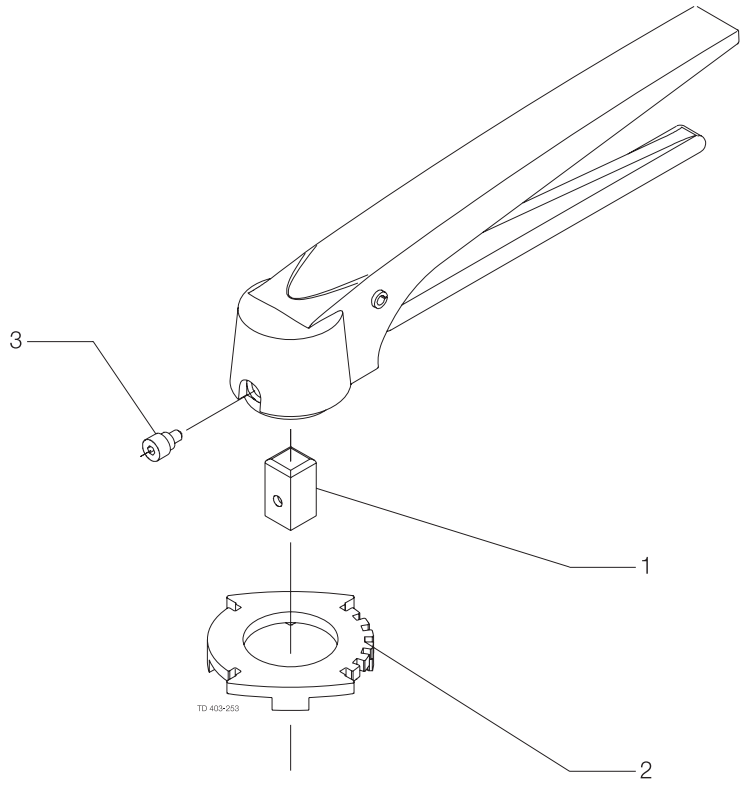
3
1
2
TD 403-253

Pos	Qty	Denomination	Disc □ 8	Disc □ 10	Disc □ 12
1	1	Insert	9612-5889-01	9612-5889-02	
2	1	Positioning cap, (76-101.6 mm/DN65-100)		9612-5888-01	9612-5888-01
		Positioning cap, (25-63.5 mm/DN25-50)	9612-5887-01		
3	1	Screw	9612-0453-02	9612-0453-01	9612-0453-01

900530

Handle 1.1 for Butterfly valve LKB

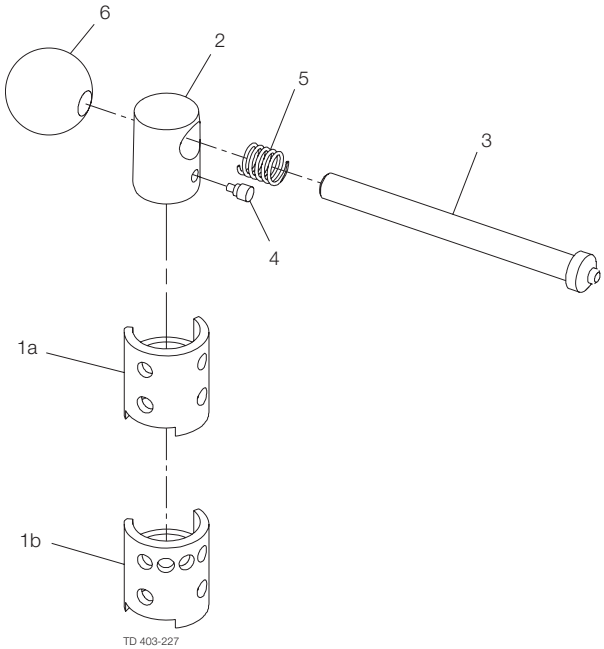

Handle 1.1 with infinite positions for Butterfly valve LKB

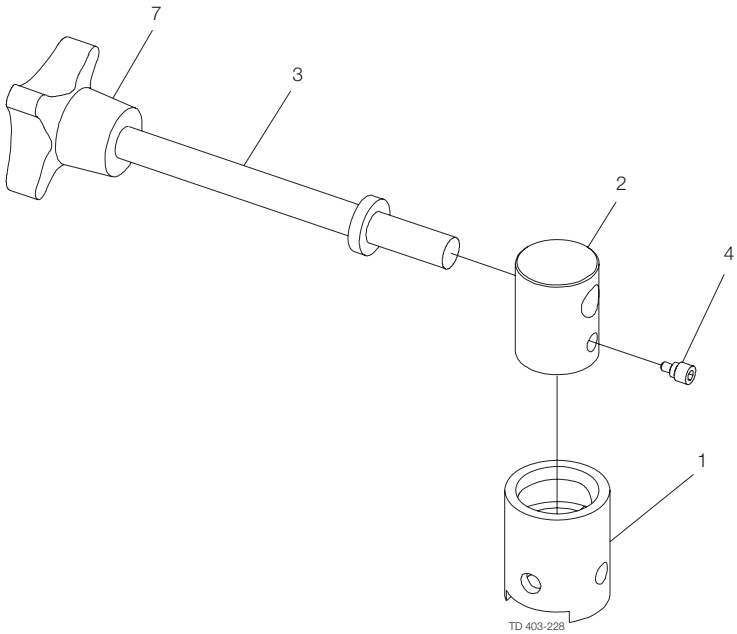

Handle 1.1 for Butterfly valve LKB (standard)

Pos	Qty	Denomination	25 - 63.5 mm DN 25 - 50 Disc □ 8	76 mm DN 65 - 80 Disc □ 10	101.6 mm DN 100 Disc □ 12	DN 125 Disc □ 14	DN 150 Disc □ 15
1a	1	Location cap , with 2 pos.	9611-41-138-0	9611-41-143-0	9612-0464-01		
1b	1	Location cap , with 4 pos.	9611-41-739-0	9611-41-740-0	9612-0465-01	9612-0777-01	9612-0792-01
2	1	Transfer block	9612-0454-01	9612-0455-01	9612-0462-01	9612-0778-01	9612-0793-01
3	1	Handle	9611-41-140-0	9611-41-140-1	9612-0461-01	9612-0779-01	9612-3685-01
4	1	Screw with pin	9612-0452-01	9612-0453-01	9612-0453-01	9612-0453-01	9612-0453-01
5	1	Spring	9611-99-1998	9611-99-1998	9611-99-1982	9612-0781-01	9612-3651-01
6	1	Ball	9611-99-1970	9611-99-1970	9611-99-1981	9611-99-2512	9611-99-2713

Handle 1.1 for Butterfly valve LKB (cap turned 90º)

Pos	Qty	Denomination	25 - 63.5 mm DN 25 - 50 Disc □ 8	76 mm DN 65 - 80 Disc □ 10	101.6 mm DN 100 Disc □ 12
1a	1	Location cap turned 90^0 2pos.	9612-0786-02	9612-0787-02	9612-0788-02
1b	1	Location cap turned 90^0 4pos.	9612-0786-01	9612-0787-01	9612-0788-01
2	1	Transfer block	9612-0454-01	9612-0455-01	9612-0462-01
3	1	Handle	9611-41-140-0	9611-41-140-1	9612-0461-01
4	1	Screw with pin	9612-0452-01	9612-0453-01	9612-0453-01
5	1	Spring	9611-99-1998	9611-99-1998	9611-99-1982
6	1	Ball	9611-99-1970	9611-99-1970	9611-99-1981

Handle 1.1 with infinite positions for Butterfly valve LKB

Pos	Qty	Denomination	25 - 63.5 mm DN 25 - 50 Disc □ 8	76 mm DN 65 - 80 Disc □ 10	101.6 mm DN 100 Disc □ 12
		Complete valve	9612-0474-01	9612-0474-02	9612-0474-03
1	1	Location cap	9612-0471-01	9612-0471-02	9612-0471-03
2	1	Transfer block	9612-0470-01	9612-0470-02	9612-0470-03
3	1	Handle	9612-0472-01	9612-0472-02	9612-0472-02
4	1	Screw with pin	9612-0452-01	9612-0453-01	9612-0453-01
7	1	Crosshead	9611-99-1995	9611-99-1996	9611-99-1996

NB:

1) Handle 1.1 with □ 10 connection can also be used for old version 101,6 mm DN 100 LKB valve.

1) Handle 1.1 with □ 8 connection can also be used for old version DN 65 LKB valve.

900265

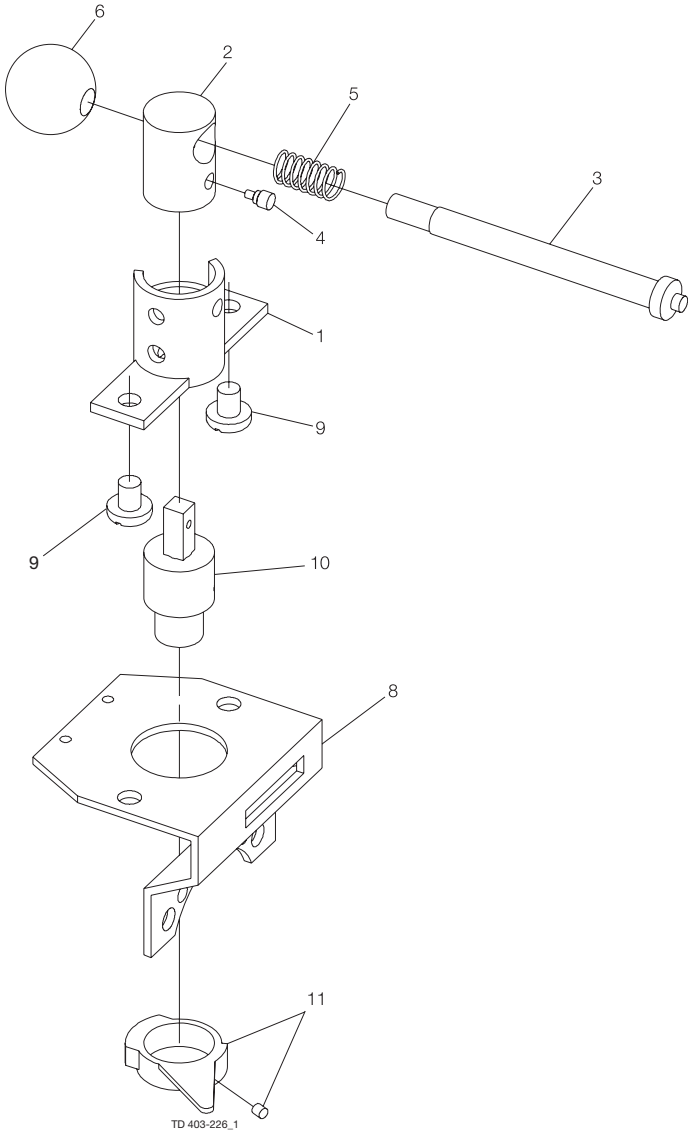
6
2
5
3
4
1
9
9
10
8
11
TD 403-226_1

Handle 1.1 for Indication Unit

Pos	Qty	Denomination	25 - 63.5 mm DN 25-50 Disc □ 8	76 mm DN 80 Disc □ 10	101.6 mm DN 100 Disc □ 12	DN 65 (LKB-DIN) Disc □ 10
1	1	Location cap with 2 pos.	9611-41-766-1	9611-41-767-1	9612-0469-01	9611-41-767-1
2	1	Transfer block	9612-0454-01	9612-0455-01	9612-0462-01	9612-0455-01
3	1	Handle	9611-41-140-0	9611-41-140-1	9612-0461-01	9611-41-140-1
4	1	Screw with pin	9612-0452-01	9612-0453-01	9612-0453-01	9612-0453-01
5	1	Spring	9611-99-1998	9611-99-1998	9611-99-1982	9611-99-1998
6	1	Ball	9611-99-1970	9611-99-1970	9611-99-1981	9611-99-1970
8	1	Bracket	9611-41-647-0	9611-41-648-0	9611-41-648-0	9612-0815-02
9	2	Screw	9611-99-1686	9611-99-1686	9611-99-1686	9611-99-1686
10	1	Coupling	9611-41-771-1	9611-41-770-1	9612-0468-01	9611-41-770-1
11	1	Activating ring with screw	9611-41-669-0	9611-41-669-0	9611-41-669-0	9611-41-669-0

900167/1

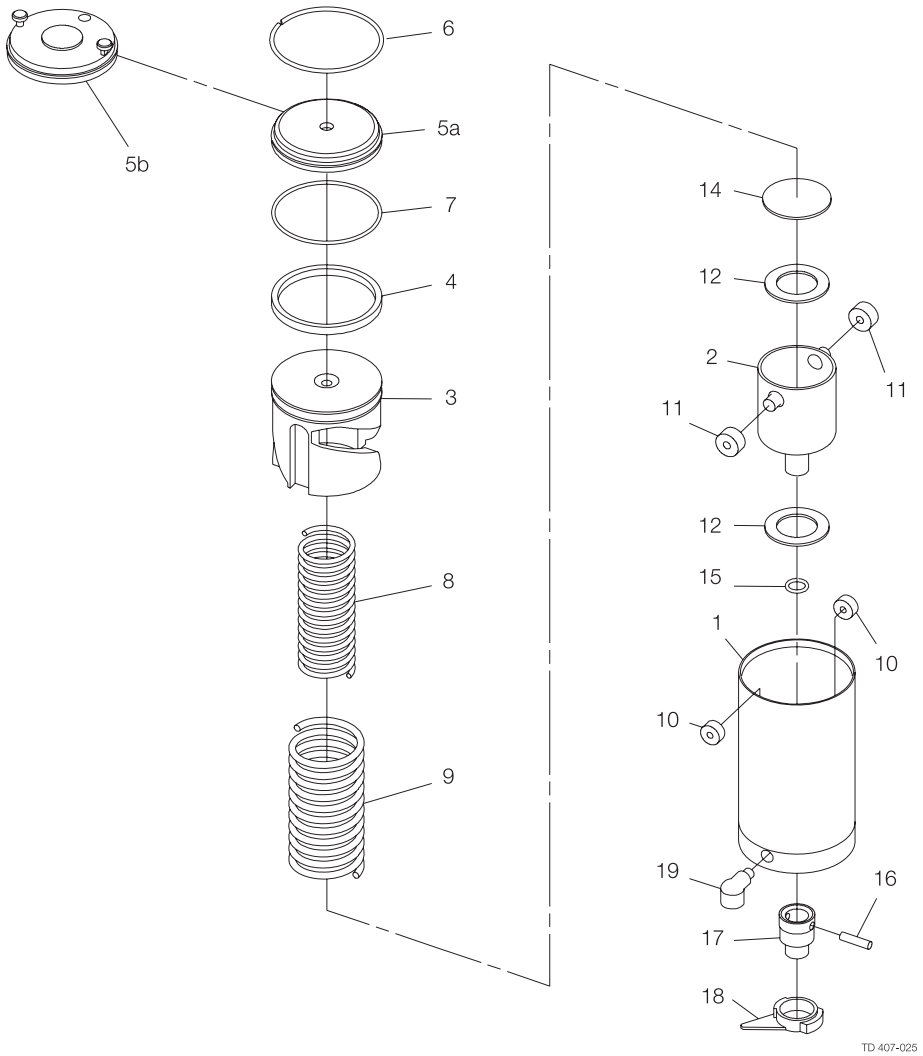
6
5a
5b
7
4
3
8
9
14
12
2
11
11
12
15
1
10
10
19
16
17
18
TD 407-025

Pos		Qty	Denomination	NC 25-63.5 mm DN 25-50 Disc □ 8	NC 76 mm DN 65-80 Disc □ 10	NC 101.6 mm DN 100 Disc □ 12	NO 25-63.5 mm DN 25-50 Disc □ 8	NO 76 mm DN 65-80 Disc □ 10	NO 101.6 mm DN 100 Disc □ 12
1		1	Air cylinder	9611-41-758-0	9611-41-758-0	9611-41-758-0	9611-41-758-0	9611-41-758-0	9611-41-758-0
2		1	Rotating cylinder	9611-41-638-0	9611-41-638-0	9611-41-638-0	9611-41-638-0	9611-41-638-0	9611-41-638-0
3		1	Piston	9612-1944-01	9612-1944-01	9612-1944-01	9612-1943-01	9612-1943-01	9612-1943-01
4	◻	1	O-ring, NBR	9611-99-0052	9611-99-0052	9611-99-0052	9611-99-0052	9611-99-0052	9611-99-0052
5a		1	End cap, (Period 0011-)	9611-41-633-0	9611-41-633-0	9611-41-633-0	9611-41-633-0	9611-41-633-0	9611-41-633-0
		1	End cap, (Period 8301-0011)	31357-0740-1	31357-0740-1	31357-0740-1	31357-0740-1	31357-0740-1	31357-0740-1
6		1	Retaining ring	9611-40-2021	9611-40-2021	9611-40-2021	9611-40-2021	9611-40-2021	9611-40-2021
7	◻	1	O-ring, NBR	9611-99-0396	9611-99-0396	9611-99-0396	9611-99-0396	9611-99-0396	9611-99-0396
8		1	Inner spring	9611-99-1629	9611-99-1629	9611-99-1629	9611-99-1629	9611-99-1629	9611-99-1629
9		1	Outer spring	9611-99-1631	9611-99-1631	9611-99-1631	9611-99-1631	9611-99-1631	9611-99-1631
10	◻	2	Needle bearing	9611-99-1230	9611-99-1230	9611-99-1230	9611-99-1230	9611-99-1230	9611-99-1230
11	◻	2	Needle bearing	9611-99-1231	9611-99-1231	9611-99-1231	9611-99-1231	9611-99-1231	9611-99-1231
12	◻	2	Thrust bearing	9611-99-1236	9611-99-1236	9611-99-1236	9611-99-1236	9611-99-1236	9611-99-1236
14		1	Thrust plate	9611-41-646-0	9611-41-646-0	9611-41-646-0	9611-41-646-0	9611-41-646-0	9611-41-646-0
15	◻	1	O-ring, NBR	9611-99-1233	9611-99-1233	9611-99-1233	9611-99-1233	9611-99-1233	9611-99-1233
16		1	Connex pin	9611-99-1235	9611-99-1235	9611-99-1235	9611-99-1235	9611-99-1235	9611-99-1235
17		1	Coupling	9611-41-644-0	9611-41-645-0	9612-0447-03	9611-41-644-0	9611-41-645-0	9612-0447-03
18		1	Activating ring, Noryl with screw	9611-41-669-0	9611-41-669-0	9611-41-669-0	9611-41-669-0	9611-41-669-0	9611-41-669-0
19		1	Water rejector (Period 8310-)	9611-41-775-0	9611-41-775-0	9611-41-775-0	9611-41-775-0	9611-41-775-0	9611-41-775-0

NC/NO for Altop

Pos	Qty	Denomination	NC 25-63.5 mm DN 25-50 Disc □ 8	NC 76 mm DN 65-80 Disc □ 10	NC 101.6 mm DN 100 Disc □ 12	NO 25-63.5 mm DN 25-50 Disc □ 8	NO 76 mm DN 65-80 Disc □ 10	NO 101.6 mm DN 100 Disc □ 12
5b	1	End cap, Mark III	9611-41-674-0	9611-41-674-0	9611-41-674-0	9611-41-674-0	9611-41-674-0	9611-41-674-0

All other parts as above.

Service Kit for Actuator

Service kits, Air/Spring 9611-92-3010

Note:
Butterfly valve 101.6 mm / DN100 sold before 8906 = □ 10 mm
Butterfly valve DN 65 (ISO) sold before 8910 = □ 8 mm
Please check the square size of the disc when ordering spares.

Parts marked with ◻ are included in the service kit.

Recommended spare parts: Service kit.

900128/2

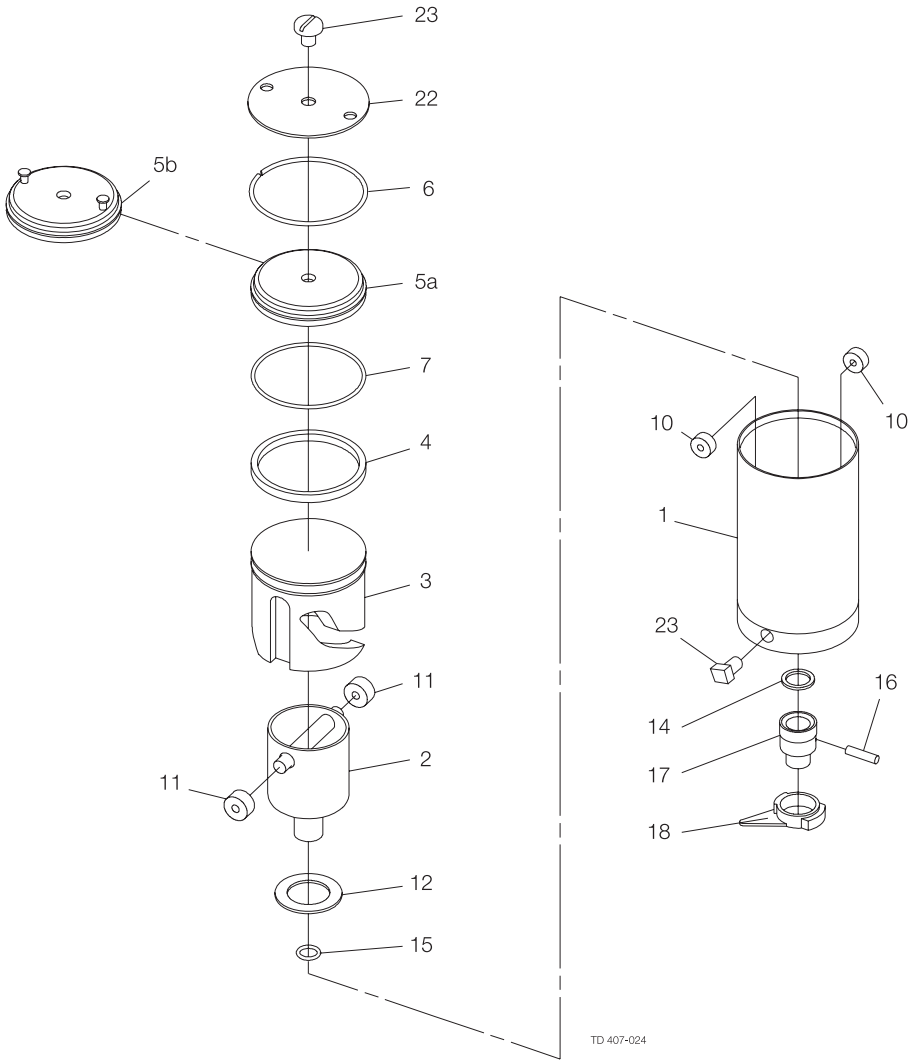
23
22
5b
6
5a
7
4
3
11
2
11
12
15
10
10
1
23
16
14
17
18
TD 407-024

Pos		Qty	Denomination	25-63.5 mm DN 25-50 Disc □ 8	76 mm DN 65-80 Disc □ 10	101.6 mm DN 100 Disc □ 12
1		1	Air Cylinder	9611-41-758-0	9611-41-758-0	9611-41-758-0
2		1	Rotating cylinder	9611-41-744-1	9611-41-744-1	9611-41-744-1
3		1	Piston	9611-41-752-0	9611-41-752-0	9611-41-752-0
4	◻	1	O-ring, NBR	9611-99-0052	9611-99-0052	9611-99-0052
5a		1	End cap, (Period 0011-)	9611-41-633-0	9611-41-633-0	9611-41-633-0
		1	End cap, (Period 8301-0011)	31357-0740-1	31357-0740-1	31357-0740-1
6		1	Retaining ring	9611-40-2021	9611-40-2021	9611-40-2021
7	◻	1	O-ring, NBR	9611-99-0396	9611-99-0396	9611-99-0396
10	◻	2	Needle bearing	9611-99-1230	9611-99-1230	9611-99-1230
11	◻	2	Needle bearing	9611-99-1231	9611-99-1231	9611-99-1231
12	◻	1	Thrust bearing	9611-99-1236	9611-99-1236	9611-99-1236
14		1	Thrust plate	9611-41-757-0	9611-41-757-0	9611-41-757-0
15	◻	1	O-ring, NBR	9611-99-1233	9611-99-1233	9611-99-1233
16		1	Connex pin	9611-99-1235	9611-99-1235	9611-99-1235
17		1	Coupling	9611-41-755-1	9611-41-756-1	9612-0448-02
18		1	Activating ring with screw	9611-41-669-0	9611-41-669-0	9611-41-669-0
22***		1	Retaining plate	9611-41-437-0	9611-41-437-0	9611-41-437-0
23		2	Threaded plug	9611-99-1221	9611-99-1221	9611-99-1221

*** Up to 8910 supplied without holes, not available anymore

Air/Air for Altop

Pos	Qty	Denomination	25-63.5 mm DN 25-50 Disc □ 8	76 mm DN 65-80 Disc □ 10	101.6 mm DN 100 Disc □ 12
5b	1	End cap, Mark III	9611-41-674-0	9611-41-674-0	9611-41-674-0

All other parts as above.

Service Kits for Actuator

Service kits, Air/Air 9611-92-3011

Note:
Butterfly valve 101.6 mm / DN100 sold before 8906 = □ 10 mm
Butterfly valve DN 65 (ISO) sold before 8910 = □ 8 mm
Please check the square size of the disc when ordering spares.

Parts marked with ◻ are included in the service kit.

Recommended spare parts: Service kit.

900129/1

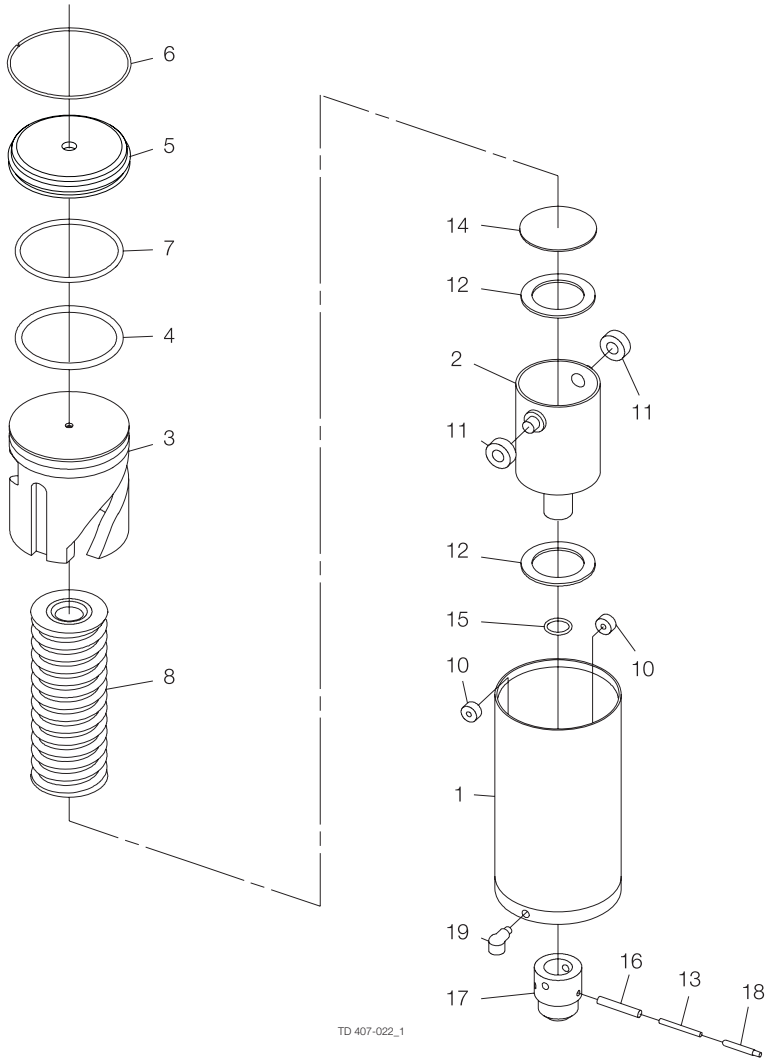
6
5
7
4
3
8
14
12
2
11
11
12
15
10
10
1
19
16
13
18
17
TD 407-022_1

Pos		Qty	Denomination	NC 101.6 mm DN 100 Disc □ 12	NO 101.6 mm DN 100 Disc □ 12	NC DN 125 Disc □ 14	NO DN 125 Disc □ 14	NC DN 150 Disc □ 15	NO DN 150 Disc □ 15
1		1	Air cylinder	9612-2685-01	9612-2685-01	9612-2685-01	9612-2685-01	9612-2685-01	9612-2685-01
2		1	Rotating cylinder	9612-2678-01	9612-2678-01	9612-2678-01	9612-2678-01	9612-2678-01	9612-2678-01
3		1	Piston	9612-2700-01	9612-2680-01	9612-2700-01	9612-2680-01	9612-2700-01	9612-2680-01
4	□	1	O-ring, NBR	9611-99-2367	9611-99-2367	9611-99-2367	9611-99-2367	9611-99-2367	9611-99-2367
5		1	End cap, (Period: 0011-)	9612-2675-01	9612-2675-01	9612-2675-01	9612-2675-01	9612-2675-01	9612-2675-01
		1	End cap, (Period:9001 - 0011)	9612-2714-01	9612-2714-01	9612-2714-01	9612-2714-01	9612-2714-01	9612-2714-01
6		1	Retaining ring	9612-2682-01	9612-2682-01	9612-2682-01	9612-2682-01	9612-2682-01	9612-2682-01
7	□	1	O-ring, NBR	9611-99-0035	9611-99-0035	9611-99-0035	9611-99-0035	9611-99-0035	9611-99-0035
8		1	Spring assembly	9612-2701-01	9612-2701-01	9612-2701-01	9612-2701-01	9612-2701-01	9612-2701-01
10	□	2	Needle bearing	9611-99-1231	9611-99-1231	9611-99-1231	9611-99-1231	9611-99-1231	9611-99-1231
11	□	2	Needle bearing	9611-99-2355	9611-99-2355	9611-99-2355	9611-99-2355	9611-99-2355	9611-99-2355
12	□	2	Thrust bearing	9611-99-2347	9611-99-2347	9611-99-2347	9611-99-2347	9611-99-2347	9611-99-2347
13		1	Connex pin	9611-99-2357	9611-99-2357	9611-99-2357	9611-99-2357	9611-99-2357	9611-99-2357
14		1	Thrust plate	9612-2671-01	9612-2671-01	9612-2671-01	9612-2671-01	9612-2671-01	9612-2671-01
15	□	1	O-ring, NBR	9611-99-0079	9611-99-0079	9611-99-0079	9611-99-0079	9611-99-0079	9611-99-0079
16		1	Connex pin	9611-99-2358	9611-99-2358	9611-99-2358	9611-99-2358	9611-99-2358	9611-99-2358
17		1	Coupling	9612-2715-01	9612-2715-01	9612-2715-02	9612-2715-02	9612-2715-03	9612-2715-03
18		1	Indication pin	9612-2719-01	9612-2719-01	9612-2719-01	9612-2719-01	9612-2719-01	9612-2719-01
19		1	Water rejector	9611-41-775-0	9611-41-775-0	9611-41-775-0	9611-41-775-0	9611-41-775-0	9611-41-775-0

Service Kits for Actuator

Service kits, Air/Spring 9611-92-3020

Parts marked with □ are included in the service kit.

Recommended spare parts: Service kit.

900131

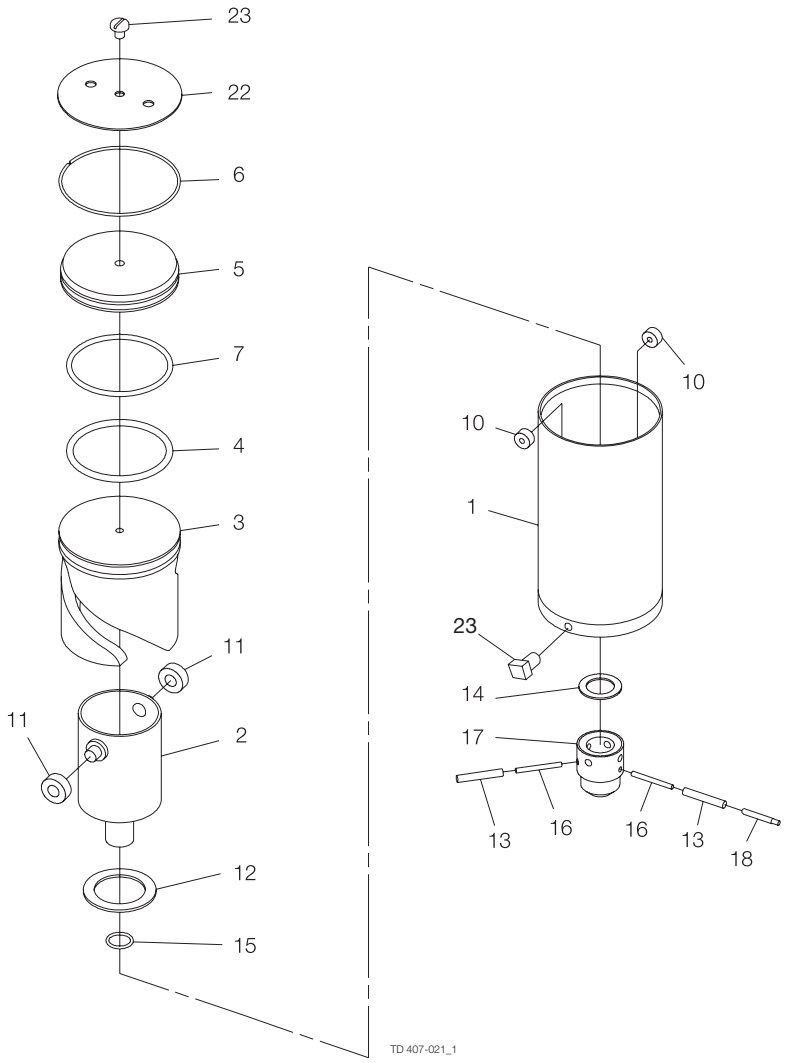
23
22
6
5
7
4
3
11
11
2
12
15
10
10
1
23
14
17
13
16
16
13
18
TD 407-021_1

Pos		Qty	Denomination	101.6 mm DN 100 Disc □ 12	DN 125 Disc □ 14	DN 150 Disc □ 15
1		1	Air Cylinder	9612-2685-01	9612-2685-01	9612-2685-01
2		1	Rotating cylinder	9612-2678-01	9612-2678-01	9612-2678-01
3		1	Piston	9612-2680-01	9612-2680-01	9612-2680-01
4	□	1	O-ring, NBR	9611-99-2367	9611-99-2367	9611-99-2367
5		1	End cap, (Period: 0011-)	9612-2675-01	9612-2675-01	9612-2675-01
		1	End cap, (Period:9001 - 0011)	9612-2714-01	9612-2714-01	9612-2714-01
6		1	Retaining ring	9612-2682-01	9612-2682-01	9612-2682-01
7	□	1	O-ring, NBR	9611-99-0035	9611-99-0035	9611-99-0035
10	□	2	Needle bearing	9611-99-1231	9611-99-1231	9611-99-1231
11	□	2	Needle bearing	9611-99-2355	9611-99-2355	9611-99-2355
12	□	1	Thrust bearing	9611-99-2347	9611-99-2347	9611-99-2347
13		2	Connex pin	9611-99-2358	9611-99-2358	9611-99-2358
14		1	Thrust plate	9612-2804-01	9612-2804-01	9612-2804-01
15	□	1	O-ring, NBR	9611-99-0079	9611-99-0079	9611-99-0079
16		2	Connex pin	9611-99-2357	9611-99-2357	9611-99-2357
17		1	Coupling	9612-2827-01	9612-2827-02	9612-2827-03
18		1	Indication pin	9612-2719-01	9612-2719-01	9612-2719-01
22		1	Retaining plate	9612-3486-01	9612-3486-01	9612-3486-01
23		1	Threaded plug	9611-99-1221	9611-99-1221	9611-99-1221

Service Kits for Actuator

Service kits, Air/Air 9611-92-3022

Parts marked with □ are included in the service kit.

Recommended spare parts: Service kit.

900132/1

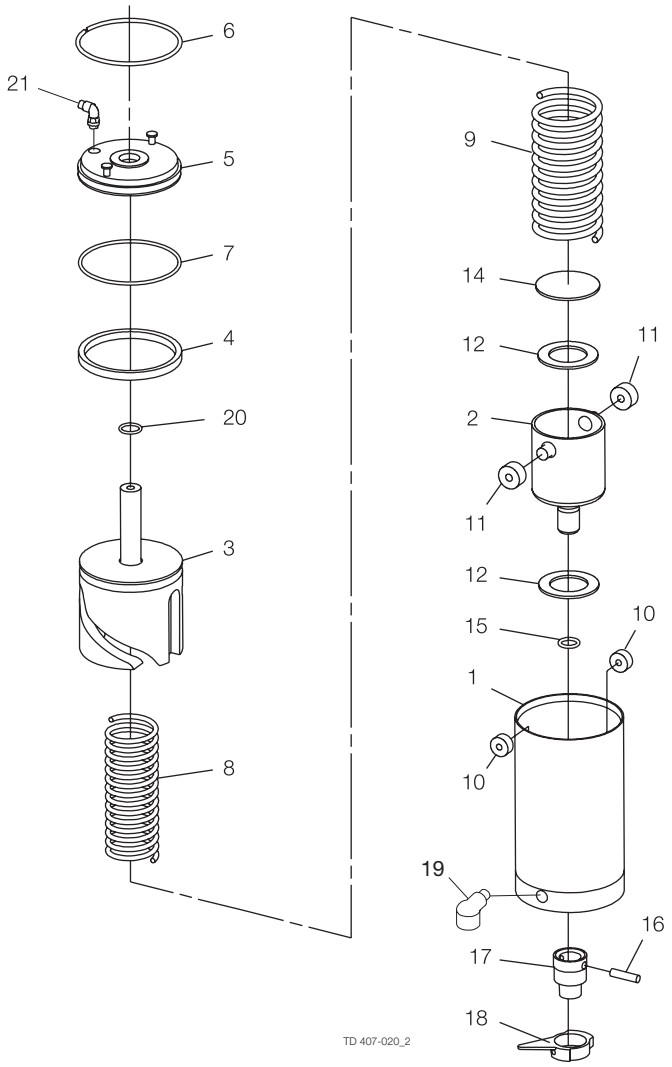
6
21
5
7
4
20
3
8
9
14
12
11
2
11
12
15
10
1
10
19
16
17
18
TD 407-020_2

Pos		Qty	Denomination	NC 25-63.5 mm DN 25-50 Disc □ 8	NC 76 mm DN 65-80 Disc □ 10	NC 101.6 mm DN 100 Disc □ 12	NO 25-63.5 mm DN 25-50 Disc □ 8	NO 76 mm DN 65-80 Disc □ 10	NO 101.6 mm DN 100 Disc □ 12
1		1	Air cylinder	9611-41-758-0	9611-41-758-0	9611-41-758-0	9611-41-758-0	9611-41-758-0	9611-41-758-0
2		1	Rotating cylinder	9611-41-638-0	9611-41-638-0	9611-41-638-0	9611-41-638-0	9611-41-638-0	9611-41-638-0
3		1	Piston	9612-1939-02	9612-1939-02	9612-1939-02	9612-1939-01	9612-1939-01	9612-1939-01
4	□	1	O-ring, NBR	9611-99-0052	9611-99-0052	9611-99-0052	9611-99-0052	9611-99-0052	9611-99-0052
5		1	End cap	9612-1936-01	9612-1936-01	9612-1936-01	9612-1936-01	9612-1936-01	9612-1936-01
6		1	Retaining ring	9611-40-202-1	9611-40-202-1	9611-40-202-1	9611-40-202-1	9611-40-202-1	9611-40-202-1
7	□	1	O-ring, NBR	9611-99-0396	9611-99-0396	9611-99-0396	9611-99-0396	9611-99-0396	9611-99-0396
8		1	Inner spring	9611-99-1629	9611-99-1629	9611-99-1629	9611-99-1629	9611-99-1629	9611-99-1629
9		1	Outer spring	9611-99-1631	9611-99-1631	9611-99-1631	9611-99-1631	9611-99-1631	9611-99-1631
10	□	2	Needle bearing	9611-99-1230	9611-99-1230	9611-99-1230	9611-99-1230	9611-99-1230	9611-99-1230
11	□	2	Needle bearing	9611-99-1231	9611-99-1231	9611-99-1231	9611-99-1231	9611-99-1231	9611-99-1231
12	□	2	Thrust bearing	9611-99-1236	9611-99-1236	9611-99-1236	9611-99-1236	9611-99-1236	9611-99-1236
14		1	Thrust plate	9611-41-646-0	9611-41-646-0	9611-41-646-0	9611-41-646-0	9611-41-646-0	9611-41-646-0
15	□	1	O-ring, NBR	9611-99-1233	9611-99-1233	9611-99-1233	9611-99-1233	9611-99-1233	9611-99-1233
16		1	Connex pin	9611-99-1235	9611-99-1235	9611-99-1235	9611-99-1235	9611-99-1235	9611-99-1235
17		1	Coupling	9611-41-644-0	9611-41-645-0	9612-0447-03	9611-41-644-0	9611-41-645-0	9612-0447-03
18		1	Activating ring with screw	9611-41-669-0	9611-41-669-0	9611-41-669-0	9611-41-669-0	9611-41-669-0	9611-41-669-0
19		1	Water rejector (period 8310-)	9611-41-775-0	9611-41-775-0	9611-41-775-0	9611-41-775-0	9611-41-775-0	9611-41-775-0
20	□	1	O-ring, NBR	223404-21	223404-21	223404-21	223404-21	223404-21	223404-21
21		1	Air fitting	9611-99-1988	9611-99-1988	9611-99-1988	9611-99-1988	9611-99-1988	9611-99-1988

Service Kits for Actuator

Service kits, Air/Spring 9611-92-3021

Parts marked with □ are included in the service kit.

Recommended spare parts: Service kit.

900133/1

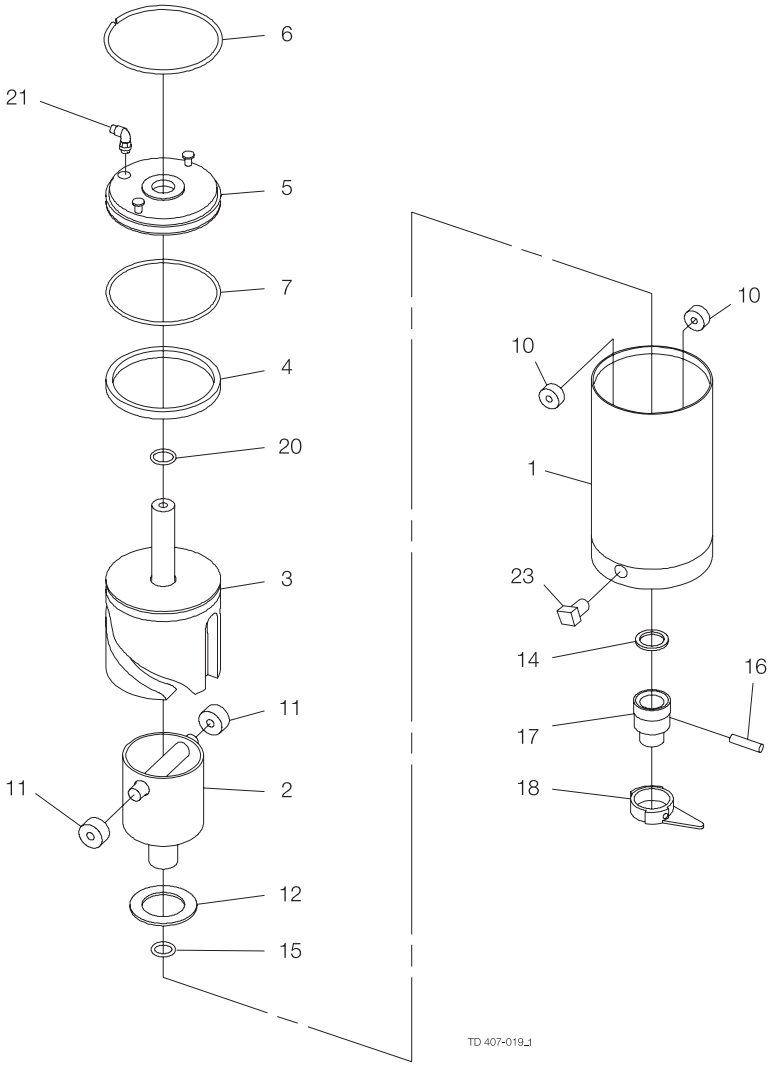
6
21
5
7
4
20
3
11
11
2
12
15
10
10
1
23
14
16
17
18
TD 407-019_1

Pos		Qty	Denomination	25-63.5 mm DN 25-50 Disc □ 8	76 mm DN 65-80 Disc □ 10	101.6 mm DN 100 Disc □ 12
1		1	Air cylinder	9611-41-758-0	9611-41-758-0	9611-41-758-0
2		1	Rotating cylinder	9611-41-744-1	9611-41-744-1	9611-41-744-1
3		1	Piston	9612-1939-03	9612-1939-03	9612-1939-03
4	□	1	O-ring, NBR	9611-99-0052	9611-99-0052	9611-99-0052
5		1	End cap	9612-1936-01	9612-1936-01	9612-1936-01
6		1	Retaining ring	9611-40-202-1	9611-40-202-1	9611-40-202-1
7	□	1	O-ring, NBR	9611-99-0396	9611-99-0396	9611-99-0396
10	□	2	Needle bearing	9611-99-1230	9611-99-1230	9611-99-1230
11	□	2	Needle bearing	9611-99-1231	9611-99-1231	9611-99-1231
12	□	1	Thrust bearing	9611-99-1236	9611-99-1236	9611-99-1236
14		1	Thrust plate	9611-41-757-0	9611-41-757-0	9611-41-757-0
15	□	1	O-ring, NBR	9611-99-1233	9611-99-1233	9611-99-1233
16		1	Connex pin	9611-99-1235	9611-99-1235	9611-99-1235
17		1	Coupling	9611-41-755-1	9611-41-756-1	9612-0448-02
18		1	Activating ring with screw	9611-41-669-0	9611-41-669-0	9611-41-669-0
20	□	1	O-ring, NBR	223404-21	223404-21	223404-21
21		1	Air fitting	9611-99-1988	9611-99-1988	9611-99-1988
23		1	Threaded plug	9611-99-1221	9611-99-1221	9611-99-1221

Service Kits for Actuator

Service kits, Air/Air 9611-92-3023

Parts marked with □ are included in the service kit.

Recommended spare parts: Service kit.

900134/1

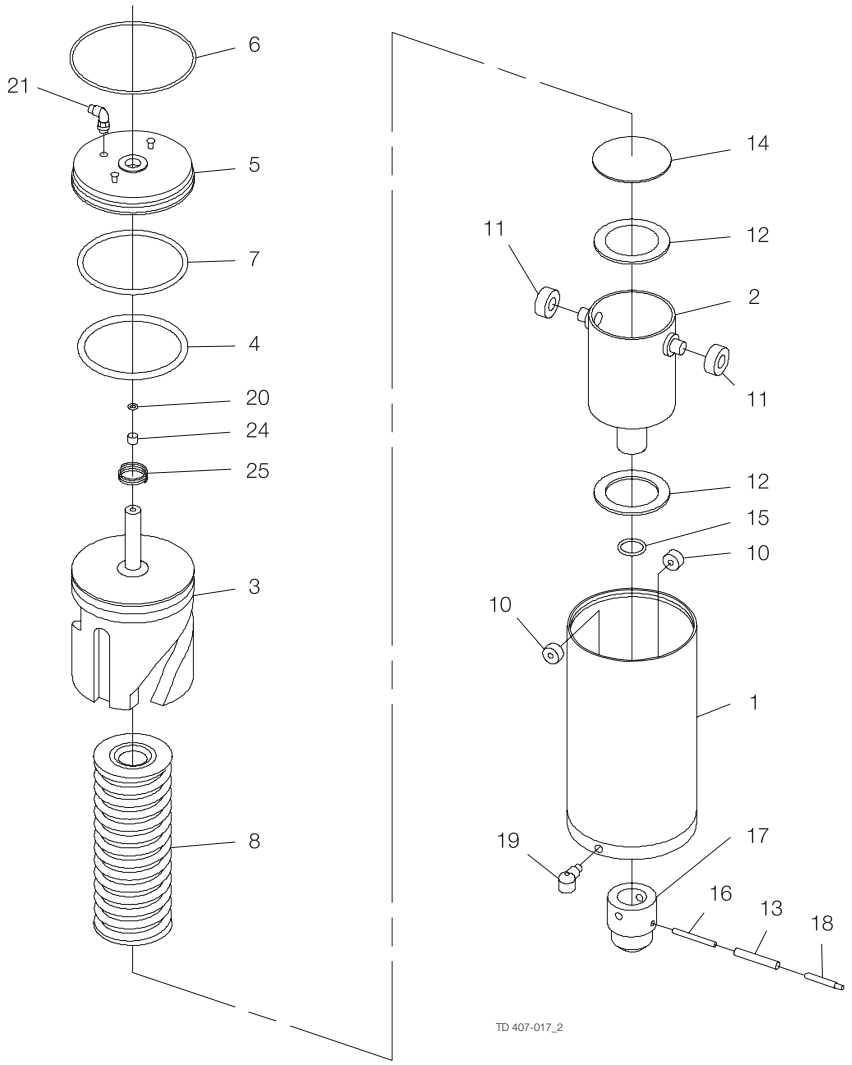
6
21
5
7
4
20
24
25
3
8
14
11
12
2
11
12
15
10
10
1
19
17
16
13
18
TD 407-017_2

Pos		Qty	Denomination	NC 101.6 mm DN 100 Disc □ 12	NO 101.6 mm DN 100 Disc □ 12	NC DN 125 Disc □ 14	NO DN 125 Disc □ 14	NC DN 150 Disc □ 15	NO DN 150 Disc □ 15
1		1	Air cylinder	9612-2685-01	9612-2685-01	9612-2685-01	9612-2685-01	9612-2685-01	9612-2685-01
2		1	Rotating cylinder	9612-2678-01	9612-2678-01	9612-2678-01	9612-2678-01	9612-2678-01	9612-2678-01
3		1	Piston	9612-3699-01	9612-3699-02	9612-3699-01	9612-3699-02	9612-3699-01	9612-3699-02
4	□	1	O-ring, NBR	9611-99-2367	9611-99-2367	9611-99-2367	9611-99-2367	9611-99-2367	9611-99-2367
5		1	End cap	9612-2714-02	9612-2714-02	9612-2714-02	9612-2714-02	9612-2714-02	9612-2714-02
6		1	Retaining ring	9612-2682-01	9612-2682-01	9612-2682-01	9612-2682-01	9612-2682-01	9612-2682-01
7	□	1	O-ring, NBR	9611-99-0035	9611-99-0035	9611-99-0035	9611-99-0035	9611-99-0035	9611-99-0035
8		1	Spring assembly	9612-2701-01	9612-2701-01	9612-2701-01	9612-2701-01	9612-2701-01	9612-2701-01
10	□	2	Needle bearing	9611-99-1231	9611-99-1231	9611-99-1231	9611-99-1231	9611-99-1231	9611-99-1231
11	□	2	Needle bearing	9611-99-2355	9611-99-2355	9611-99-2355	9611-99-2355	9611-99-2355	9611-99-2355
12	□	2	Thrust bearing	9611-99-2347	9611-99-2347	9611-99-2347	9611-99-2347	9611-99-2347	9611-99-2347
13		1	Connex pin	9611-99-2357	9611-99-2357	9611-99-2357	9611-99-2357	9611-99-2357	9611-99-2357
14		1	Thrust plate	9612-2671-01	9612-2671-01	9612-2671-01	9612-2671-01	9612-2671-01	9612-2671-01
15	□	1	O-ring, NBR	9611-99-0079	9611-99-0079	9611-99-0079	9611-99-0079	9611-99-0079	9611-99-0079
16		1	Connex pin	9611-99-2358	9611-99-2358	9611-99-2358	9611-99-2358	9611-99-2358	9611-99-2358
17		1	Coupling	9612-2715-01	9612-2715-01	9612-2715-02	9612-2715-02	9612-2715-03	9612-2715-03
18		1	Indication pin	9612-2719-01	9612-2719-01	9612-2719-01	9612-2719-01	9612-2719-01	9612-2719-01
19		1	Water rejector (period 8310-)	9611-41-775-0	9611-41-775-0	9611-41-775-0	9611-41-775-0	9611-41-775-0	9611-41-775-0
20	□	1	O-ring	223404-21	223404-21	223404-21	223404-21	223404-21	223404-21
21		1	Air fitting	9611-99-1988	9611-99-1988	9611-99-1988	9611-99-1988	9611-99-1988	9611-99-1988
24	□	1	Guiding ring	9612-3698-01	9612-3698-01	9612-3698-01	9612-3698-01	9612-3698-01	9612-3698-01
25		1	Spring	9612-3700-01	9612-3700-01	9612-3700-01	9612-3700-01	9612-3700-01	9612-3700-01

Service Kits for Actuator

Service kits, Air/Spring 9611-92-3056

Parts marked with □ are included in the service kit.

Recommended spare parts: Service kit.

900136

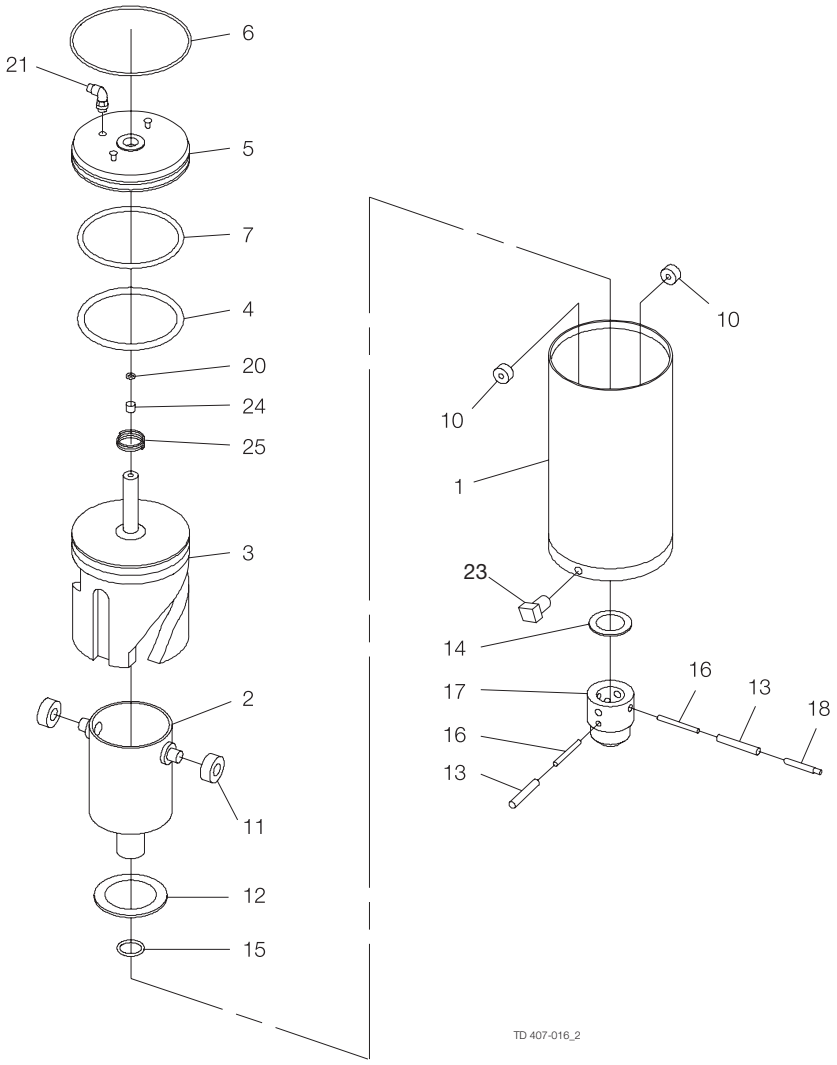
6
21
5
7
4
20
24
25
3
2
11
12
15
10
10
1
23
14
17
16
13
16
13
18
TD 407-016_2

Pos		Qty	Denomination	9612-3749-08 101.6 mm DN 100 Disc □ 12	9612-3749-13 DN 125 Disc □ 14	9612-3749-18 DN 150 Disc □ 15
1		1	Air cylinder	9612-2685-01	9612-2685-01	9612-2685-01
2		1	Rotating cylinder	9612-2678-01	9612-2678-01	9612-2678-01
3		1	Piston	9612-3699-02	9612-3699-02	9612-3699-02
4	□	1	O-ring, NBR	9611-99-2367	9611-99-2367	9611-99-2367
5		1	End cap	9612-2714-02	9612-2714-02	9612-2714-02
6		1	Retaining ring	9612-2682-01	9612-2682-01	9612-2682-01
7	□	1	O-ring, NBR	9611-99-0035	9611-99-0035	9611-99-0035
10	□	2	Needle bearing	9611-99-1231	9611-99-1231	9611-99-1231
11	□	2	Needle bearing	9611-99-2355	9611-99-2355	9611-99-2355
12	□	1	Thrust bearing	9611-99-2347	9611-99-2347	9611-99-2347
13		2	Connex pin	9611-99-2358	9611-99-2358	9611-99-2358
14		1	Thrust plate	9612-2804-01	9612-2804-01	9612-2804-01
15	□	1	O-ring, NBR	9611-99-0079	9611-99-0079	9611-99-0079
16		2	Connex pin	9611-99-2357	9611-99-2357	9611-99-2357
17		1	Coupling	9612-2827-01	9612-2827-02	9612-2827-03
18		1	Indication pin	9612-2719-01	9612-2719-01	9612-2719-01
20	□	1	O-ring, NBR	223404-21	223404-21	223404-21
21		1	Air fitting	9611-99-1988	9611-99-1988	9611-99-1988
23		1	Threaded plug	9611-99-1221	9611-99-1221	9611-99-1221
24	□	1	Guiding band	9612-3698-01	9612-3698-01	9612-3698-01
25		1	Spring	9612-3700-01	9612-3700-01	9612-3700-01

Service Kits for Actuator

Service kits, Air/Air 9611-92-3057

Parts marked with □ are included in the service kit.

Recommended spare parts: Service kit.

190137/1

How to contact Alfa Laval
Contact details for all countries are
continually updated on our website.
Please visit www.alfalaval.com to access the information directly.

© Alfa Laval Corporate AB
This document and its contents is owned by Alfa Laval Corporate AB and protected by laws governing intellectual property and thereto related rights. It is the responsibility of the user of this document to comply with all applicable intellectual property laws. Without limiting any rights related to this document, no part of this document may be copied, reproduced or transmitted in any form or by any means (electronic, mechanical, photocopying, recording, or otherwise), or for any purpose, without the expressed permission of Alfa Laval Corporate AB. Alfa Laval Corporate AB will enforce its rights related to this document to the fullest extent of the law, including the seeking of criminal prosecution.